Code HW #4:

Submit your solution on Canvas (see end for submission checklist).

For the following questions, consider the single DOF robot diagram shown in Figure 2. This is similar to the robot from Written Homework #4 but with a different applied force (and defined dimensions). In this case, the force is applied by a human who can push, but not twist, at point r. The applied force is measured with a force sensor fixed to the B frame whose axes are aligned with the B frame. The force variables and robot dimensions are given as:

$$f_a = \begin{bmatrix} f_x \\ f_y \\ f_z \end{bmatrix} \qquad \begin{aligned} d_0 &= 3 \\ d_1 &= 1 \\ d_2 &= d_3 = 2 \end{aligned}$$

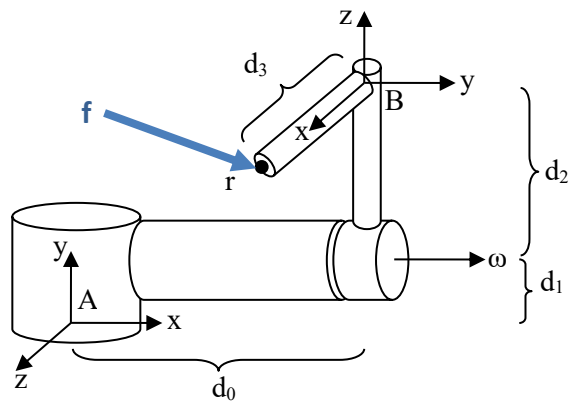

Figure 2. A 1 DOF manipulator in its home position

Using MATLAB or Python, find the following expressions using the symbolic variables listed. Also create a numeric function file for the expression and test it using the given conditions (symbolic variables shown as vectors are meant to be passed as vectors to your function files). Make sure to simplify all of your expressions.

Expressions	Symbolic variables	Function Name	Test Conditions
The homogeneous transformation $\mathbf{g}_{ab}(\theta)$.	`th`	`gabthCKB.m`	$\theta = 30°$
The Adjoint transformation $\mathrm{Ad}_{\mathbf{g}_{ab}(\theta)}$.	`th`	`AdgCKB.m`	$\theta = 30°$
The body wrench, $\mathbf{F}^b$, caused by force $\mathbf{f}_a$.	`th, [fx, fy, fz]'`	`FbCKB.m`	$\theta = 30°,\ f_a = [7\ \ 6\ \ 9]^T$
The spatial wrench, $\mathbf{F}^a$, caused by force $\mathbf{f}_a$.	`th, [fx, fy, fz]'`	`FaCKB.m`	$\theta = 30°,\ f_a = [7\ \ 6\ \ 9]^T$

Hint: to compute f_b apply a change of basis operation.

Your code should only output the symbolic expressions listed above in order. Each symbolic expression should be followed by a numerical version at the specified test condition.

HW #4: WHAT TO SUBMIT

Submit ***individual files*** on Canvas (not zipped) using the naming convention given. Check Canvas for the due date and time.

A. **`HW04_Lastname_kinematics.m/.py`.** Your kinematics script-file; this file should output only the results from testing the 4 sub-functions at the conditions specified in the table. It should also create the sub-functions:
   a. **`gabthCKB.m/.py`**
   b. **`AdgCKB.m/.py`**
   c. **`FaCKB.m/.py`**
   d. **`FbCKB.m/.py`**